EFIS-D10A

Standby Flight Display

Installation and Maintenance Manual

Includes Instructions for Continued Airworthiness (ICA)

STC SA02594SE

103914-000

Contact Information

Dynon Avionics, Inc.
19825 141st Place NE
Woodinville, WA 98072

Technical Support
Phone: +1 (425) 399-7742, 8:00 AM – 5:00 PM (Pacific Time) Monday – Friday
Email: support@dynoncertified.com

Sales
Phone: +1 (425) 650-1269, 8:00 AM – 5:00 PM (Pacific Time) Monday – Friday
Email: sales@dynoncertified.com

Find Us on the Web

dynoncertified.com – Dynon Certified homepage
dynoncertified.com/docs – Product documentation
dynoncertified.com/download – Software updates for products
dynoncertified.com/support – Support resources
dynoncertified.com/register – Register your Dynon Avionics product

Stay in Touch

dynoncertified.com/newsletter – Sign up to receive Dynon's newsletter
forum.flydynon.com – Dynon-hosted forum for customers and pilots
preflight.dynon.com – Dynon's blog
facebook.com/dynonavionics
instagram.com/dynonavionics
twitter.com/dynon

Videos and Training

youtube.com/DynonAvionics – Training, events, and other videos on YouTube

Revision History

REV	DYNON SUBMITTAL DATE	DESCRIPTION OF CHANGE
A	No Submission	Initial Release – document did not contain ICA.
B	4/9/2021 ECO 370915	• Initial FAA Submission: ▪ Added FAA Approval section. ▪ Added Airworthiness Limitations section. ▪ Added Certified Installation Compliance section. ▪ Added new, standardized content in Introduction section. ▪ Moved system overview content from Introduction section to new System Overview section. ▪ Combined Mechanical Installation, Electrical Installation, and Configuration sections into one Installation section. ▪ Updated introductory content in Mechanical Introduction section with approved, standardized content. ▪ Added Replacement Hardware section. ▪ Added Periodic Maintenance table.
C	9/3/2021 ECO 374582	• Revised Revision History table per FAA feedback received on 9/2/2021. • Revised intro in Section 1 per FAA feedback received on 9/2/2021. • Added EFIS-D10A Airplane Flight Manual Supplement document to Section 1.5. • Added SkyView HDX General Maintenance Manual document to Section 1.5. • Added Section 1.9 per FAA feedback received on 9/2/2021. • Revised Section 2 per FAA feedback received on 9/2/2021. • Removed first note in Section 3.1, as it did not apply to this document. • Removed third column of Table 1 which noted using comparable hardware per FAA feedback received on 9/1/2021. • Revised old Section 5.3.1 Unit Operation to make it more evident that it is an initial operation check per FAA feedback received on 9/1/2021. Section renamed/renumbered and subsequent sections renumbered. • Added Section 6: Display Operation and referenced the EFIS-D10A Airplane Flight Manual Supplement document per FAA feedback received on 9/1/2021. Subsequent sections renumbered. • Added a link to Section 5.3 Initial Operation Check in Section 8.3 per FAA feedback received on 9/1/2021.
D	10/21/2021 ECO 374582	• Updated document page numbering and headers/footers to follow GAMA2 standard. • Revised Revision History table to be clear that Rev A, dated 2/4/2020, was not submitted to FAA. • Revised Revision History table to be clear that some submitted revisions were not accepted by FAA. • Removed FAA Approval section per FAA feedback received on 9/21/2021. • Revised Section 1.5: Reference Documents to list the SkyView HDX Airplane Flight Manual Supplement document as source for EFIS-D10A operations information. • Revised Section 2 per FAA feedback received on 9/21/2021. • Switched document order of Section 3: Certified Installation Compliance and Section 4: System Overview. • Revised Section 3: System Overview to include subsection 3.1: Basic Control and Operation and 3.1.1: Menu System. • Updated Table 1 to show #6 hardware. • Updated Table 2 to show one breaker is required. • Revised and moved Section 6: System Operation to Section 3.2 to be continuous with other operational sections. • Renamed Section 7.3: Removal and Installation to Removal and Replacement to be consistent with nomenclature in 8110.54a. • Revised and renamed Section 7.4: IFR Altimeter System Equipment Test (FAR 91.411) into two sections to be clear that certified technicians perform the altimeter test, and then adjust the altimeter. **Accepted by Seattle ACO on 11/10/2021**

E	2/7/2023 ECO 381021	• Removed FAA Acceptance column from Revision History table per feedback from AACO. (No change bar for this change.) • Updated Contact Information page. • Updated all external Dynon links. • Replaced "mechanic" with "technician", "AMT", or " appropriately rated person or facility" throughout document. • Added Section 3.1: Specifications. Subsequent sections renumbered. • Revised verbiage in the start-up and shut-down procedure in Section 3.3: System Operation for better readability/understandability. • Added Section 5.1: Backup Battery Installation. Subsequent sections renumbered. • Revised verbiage about installation guidelines in Section 5.2: Mechanical Installation for better readability/understandability. • Revised Section 5.3: Electrical Installation to include wire harness part number and correct pin usage on wire harness (Table 2, Figure 7). Also added a reference to AC43.13-1b. • Divided Section 7: Maintenance into a section with a subsection (Periodic Maintenance). Subsequent sections renumbered. • Added note about "appropriately rated person or facility" to Section 7.1: Periodic Maintenance, 7.3: Backup Battery Replacement, and Section 7.4: Unit Removal and Replacement. • Fixed grammar issue in Section 7.3: Backup Battery Replacement. • Added a step to altimeter function test in Section 7.5 to allow unit to warm up.

Table of Contents

1 Introduction

The information herein is applicable to all airplanes on the Approved Model List (AML) of Supplemental Type Certificate (STC) SA02594SE.

This document provides installation and configuration information for the Dynon EFIS-D10A Standby Flight Display. It also provides Instructions for Continued Airworthiness (ICA) for use by authorized personnel to service and maintain the EFIS-D10A according to Federal Aviation Regulation (FAR) 14 CFR § 23.1529 and 14 CFR 23 Appendix G.

This document does not provide ICA for the SkyView HDX system or SkyView Autopilot servos. That information is provided in the *103221-000 SkyView HDX General Maintenance Manual* document and the *Autopilot Servo Installation & Maintenance Manual* documents for specific aircraft makes/models at dynoncertified.com/docs.

1.1 Document Control

This document is released, archived, and controlled according to the Dynon Avionics document control system. To revise this document, a letter is submitted to the FAA with the revision. The FAA then accepts and approves any revision to Section 2: Airworthiness Limitations. After FAA acceptance/approval, Dynon posts the revised document for customer use at dynoncertified.com/docs, and STC owners and installers are notified of the new revision via an official Dynon Marketing email release.

1.2 Using this Manual

To save paper, Dynon does not provide a printed version of this manual. However, Dynon grants permission to third parties to print this manual, as necessary. The most recent PDF version is available for download at dynoncertified.com/docs. This manual is updated periodically. It is important to use the most recent revision when servicing SkyView components.

Dynon suggests keeping a PDF version of the manual on a smartphone, tablet, or laptop computer while installing and servicing SkyView components. Using the manual electronically allows quick navigation of the document, figures to be viewed in color, and keyword searches.

1.3 Intended Audience

This document is intended for FAA-certified Aviation Maintenance Technicians. It assumes technicians have the knowledge and training required to perform the procedures in this manual.

1.4 Manual Iconography

This manual uses the following iconography:

Alerts reader to important information that mitigates potential unsafe conditions and/or equipment damage.

Alerts reader to noteworthy technical information.

Alerts reader to information regarding FAA compliance.

Alerts reader to helpful tips or suggestions.

1.5 Reference Documents

- 103221-000 – SkyView HDX General Maintenance Manual (*current revision*)
- 103272-000 – SkyView HDX Airplane Flight Manual Supplement (*current revision*)
- 23.1311-1C – Installation of Electronic Display in Part 23 Airplanes
- AC 43.13-1B – Acceptable Methods, Techniques and Practices – Aircraft Inspection and Repair
- AC 43.13-2B – Acceptable Methods, Techniques and Practices – Aircraft Alterations

1.6 Mechanical Drawings

All mechanical drawings included in this manual are for *reference purposes only*. They should not be scaled or copied and used as templates or patterns.

1.7 Product Delivery

Upon delivery, visually inspect the EFIS-D10A and accessories (fasteners, cable harness, etc.) for damage that may have occurred during shipping. If damage has occurred, contact Dynon Technical Support.

1.8 Product Registration

Register the EFIS-D10A at dynoncertified.com/register. Product registration confirms ownership, expedites warranty claims, and allows Dynon Avionics to send notification when product Service Bulletins and Technical Advisories are published. This site also allows owners and installers to register to receive news and product announcements from Dynon. Dynon will not share contact information with third-parties or send announcements without explicit consent.

1.9 Installation Record

The technician performing the installation should record where the equipment has been installed in the airplane. This documentation should be entered into airplane's permanent record. Dynon provides a document template to record this information. Download the *SkyView HDX Equipment Installation Record* document at dynoncertified.com/docs.

This page intentionally left blank.

2 Airworthiness Limitations

For any Airworthiness Limitations associated with the installation of the EFIS-D10A, see the *SkyView HDX General Maintenance Manual* document at dynoncertified.com/docs. It is the principal ICA document for the SkyView HDX system.

This page intentionally left blank.

3 System Overview

The EFIS-D10A features internal, calibrated solid-state sensors and a digital screen display to present Airspeed, Altitude, and Attitude data. In a SkyView HDX system, it serves as a Standby Flight Display for the Primary Flight Display (PFD).

The Standby Flight Display provides pilots with immediate Primary Flight Information (PFI) in case of a SkyView HDX system failure. It also allows pilots to cross-compare the presented PFI to ensure data integrity.

Figure 1: EFIS-D10A

3.1 Specifications

MECHANICAL SPECIFICATIONS	
Width	4.09" (103.9 mm)
Height	3.39" (86.1 mm)
Length	7.55" (191.8 mm)
Weight	1.9 lbs.
Finish	Black Anodized Aluminum
Operating Temperature	-20 to 70 °C
Storage Temperature	-55 to 80 °C
ELECTRICAL SPECIFICATIONS	
Power Requirement	10–30V
Power Consumption	8W (Typical), 12W (Maximum)
Connector Type	D25 Male
DISPLAY SPECIFICATIONS	
Display Type	AMLCD, TFT
Resolution	320 x 240 px

3.2 Basic Control and Operation

Operating the EFIS-D10A is intuitive for people familiar with flight instrumentation. Basic operation happens via the front panel. The front panel contains buttons and a display. There are six buttons on the front panel of the EFIS-D10A. The buttons are referred to as 1 through 6, with button 1 being the leftmost and button 6 being the rightmost. The buttons are used to turn the unit on and off, access and scroll through menus, and adjust instrument parameters.

Figure 2: EFIS-D10A Buttons

3.2.1 Menu System

All interaction with the EFIS-D10A is accomplished using its menu system. The menu system is accessed and navigated via six buttons and associated labels. To enter the menu system, press any button (except 1 and 6). To exit the menu system, press the BACK button as many times as needed.

Figure 3: EFIS-D10A Menu System

A menu consists of two rows containing text. The upper row contains a tab that denotes the currently displayed menu. The lower row contains six labels that denote the function of the button below it. Onscreen elements move up to avoid the menu. This prevents the menu from obscuring useful data while it is being displayed. Upon exiting the menu, the screen returns to its normal appearance.

Pressing a button either displays another menu or adjusts a parameter. If there is no text above a button, then that button does not have a function in the context of that menu. Occasionally, a button label spans two or more buttons. In this case, any button below the label invokes the command.

If a menu contains more options than there are buttons, the MORE label is displayed over button five. Pressing this button presents the next set of options in the current menu.

In any menu, press the BACK button to return to the previous menu and save changes. In all top-level menus, button six is the EXIT button. Pressing EXIT removes the menu system and moves the onscreen elements down to their original positions.

3.3 System Operation

No special operating procedures are required for using the EFIS-D10A.

Operating limitations for the EFIS-D10A are listed in the *103272-000 SkyView HDX Airplane Flight Manual Supplement* document at dynoncertified.com/docs.

To start-up and shut-down the unit:

1. Apply power to unit. Unit will start-up.
2. If power is applied to unit and unit does not start, press button #1. Unit will start-up.
3. To shut-down unit, press and hold button #1. The Hold To Power Down message is displayed, and unit will shut-down in 3 seconds.

To adjust the unit's screen brightness:

1. Press any button (except #1 and #6). EFIS menu is displayed.
2. Press MORE, and then DIM. Dimmer menu is displayed.
3. Press BRITR to increase brightness, press DARKR to reduce brightness.
4. When done, press BACK/EXIT.

To adjust the Altimeter:

1. Press any button (except #1 and #6). EFIS menu is displayed.
2. Press BARO. Barometer menu is displayed.
3. Press UNITS: INHG/MBAR to set altimeter units.
4. Press 29.92 / 1013 to quickly set altitude setting to standard pressure.
5. Press DEC – and INC + to adjust altimeter setting as needed.
6. When done, press BACK/EXIT.

4 Certified Installation Compliance

Some airplanes may have been modified from their stock type design, and consequently, it may be difficult to use the information in this manual to completely substantiate the installation in compliance with the STC. It is the installer's responsibility to make the final determination of applicability for each individual airplane.

Prior to completing the installation, and before returning the aircraft to service, the installer must complete and submit a completed FAA Form 337 Major Repair & Alteration (Airframe, Powerplant, Propeller, or Appliance). The form must include the following:

- Description of the EFIS-D10A installation.
- Appropriately approved or acceptable data that demonstrates compliance.

Refer to AC 43.9-1G - Instructions for Completion of FAA Form 337 for additional information.

4.1 Pre-installation Information

Read and understand the following before proceeding with installation activities.

Always install avionics equipment in accordance with the instructions in this manual and the guidance and approved engineering methods outlined the following FAA documents:

- 23.1311-1C - Installation of Electronic Display in Part 23 Airplanes
- AC 43.13-1B - Acceptable Methods, Techniques, and Practices - Aircraft Inspection
- AC 43.13-2B - Acceptable Methods, Techniques, and Practices - Aircraft Alterations

The technician who will authorize the airplane's return to service should agree with the installation plan (i.e., methods, unit location, wire harness routing, etc.) before installation activities begin. This will help avoid potential rework should any part of the installation be found non-compliant.

This page intentionally left blank.

5 Installation

This section provides information and instructions for installing the EFIS-D10A.

5.1 Backup Battery Installation

Per shipping regulations, the EFIS-D10A is shipped without the backup battery installed. Prior to mechanical and electrical installation, the EFIS-D10A needs its backup battery installed.

To install the EFIS-D10A's backup battery:

1. Open backup battery door by removing hex screws (see Figure 4). Do not remove other screws.
2. Insert backup battery so side of battery where wires attach point upward, towards internal protective foam.
3. Plug backup battery's electrical connector into matching electrical connector on unit.
4. Position electrical connection so it is centered on end of backup battery. Make sure electrical connection will not interfere with bottom hex screw (see Figure 4).
5. Position backup battery door over opening on unit.
6. Insert bottom hex screw (see Figure 4) and tighten. DO NOT over-tighten.
7. Insert upper hex screws (see Figure 4) and tighten while gently pressing on door. DO NOT over-tighten. The upper hex screws thread into unit casing, where it is easy to over-tighten and strip hole threads.

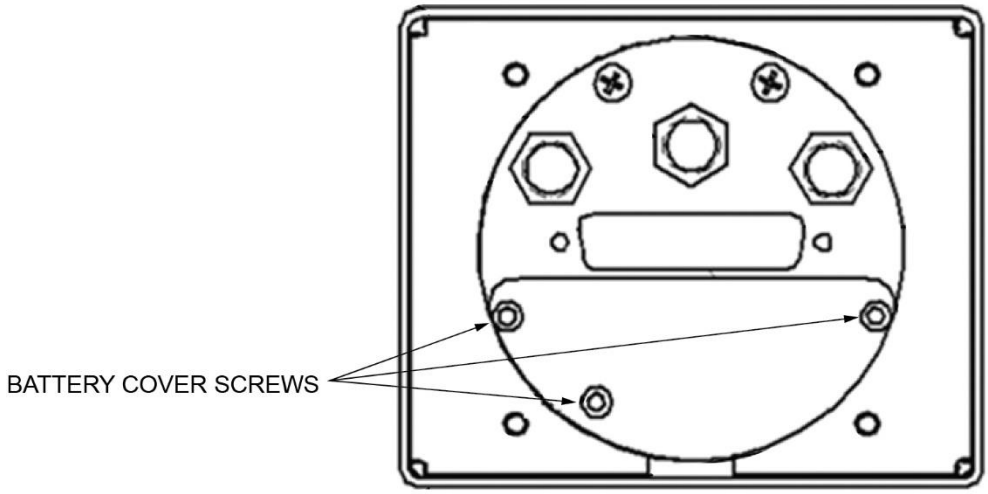

Figure 4: EFIS-D10A, Rear View

5.2 Mechanical Installation

The Dynon EFIS-D10A must be installed within the primary maximum field-of-view boundary, as close as practicable to the SkyView HDX display. According to AC 23.1311-1C, the primary maximum field-of-view is based on vertical and horizontal visual fields from the pilot's eye reference point that can be observed with eye movement and minimal head movement only.

The EFIS-D10A is designed to surface mount to the instrument panel in standard instrument holes (3.125" diameter) with little modification.

Observe the following guidelines when installing an EFIS-D10A:

- Unit should be installed so its bezel is level across aircraft's lateral axis.
- Wire harness extends about 3" from the rear of the unit. (This can be reduced if 90° connector shell is used on the wire harness.)
- Front bezel will extend 0.8" (20 mm) beyond the face of the instrument panel.
- Unit will need to be accessed during service; therefore, provide enough slack in the wire harness and the pitot and static lines to remove the unit from the instrument panel without disconnection.
- Avoid placing the unit near sources of heat.

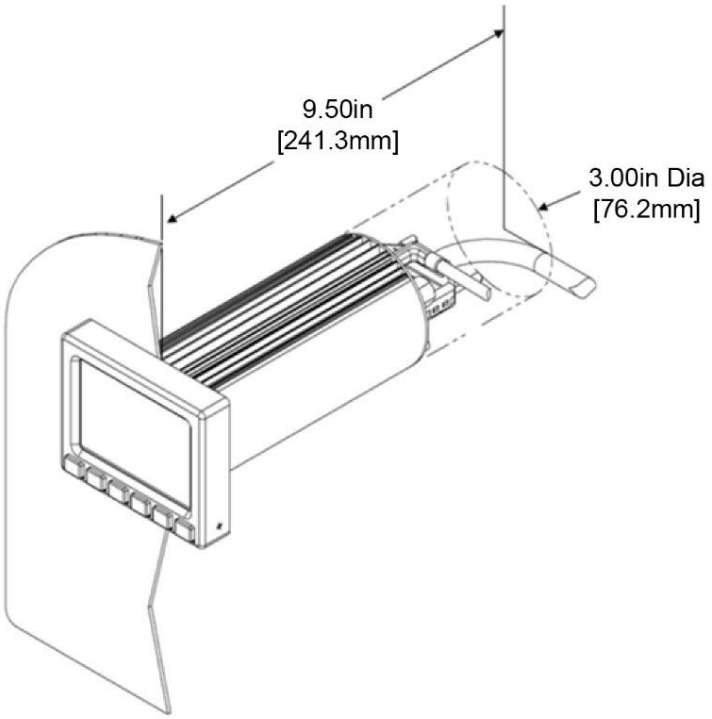

Figure 5: Volume Requirements

To mount the EFIS-D10A to an instrument panel:

1. Use Figure 6 as a guide to prepare instrument panel for cutting.
2. Cut an opening for unit in instrument panel. Make sure instrument panel opening includes necessary margins for paint or other applied finishes.
3. Drill (#16) and deburr holes for threaded studs.
4. Line-up threaded studs to holes and insert unit into instrument panel.
5. Secure unit to instrument panel with included #6 flat washers and #6-32 lock nuts.

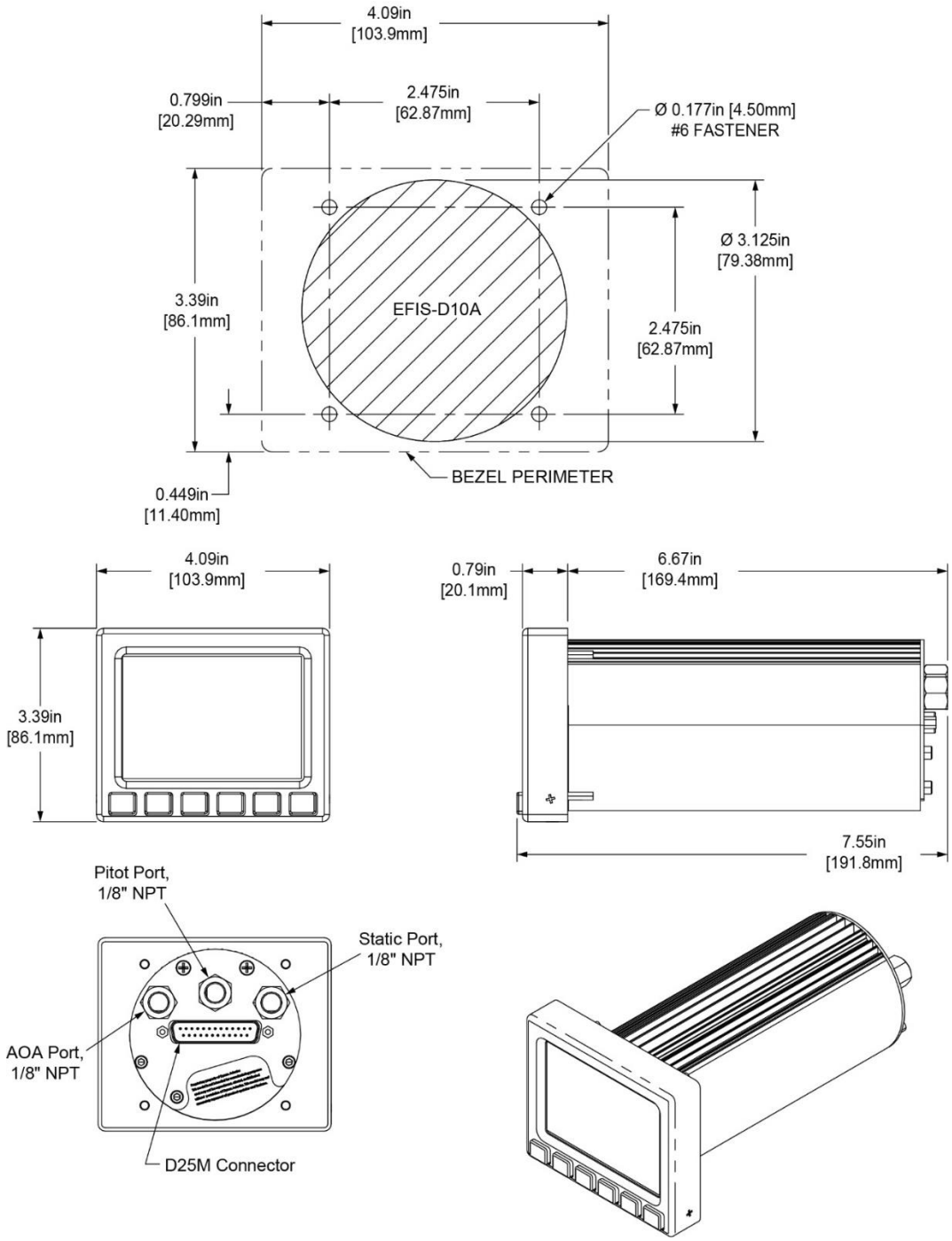

Figure 6: EFIS-D10A, Panel Cutout & Mounting Dimensions

To attach Pitot and Static lines to the EFIS-D10A:

1. Source (2) correctly-sized 1/8" NPT to tube adapters and T-connectors for existing Pitot and Static lines.
2. Use T-connectors to splice into existing Pitot and Static lines.
3. Remove male plugs from Pitot and Static female pipe fittings on EFIS-D10A. Plug in AoA pipe fitting remains in place.
4. Apply Teflon tape and thread 1/8" NPT adapters into Pitot and Static female fittings on EFIS-D10A. Use two wrenches to tighten fittings—DO NOT over-tighten or allow female fittings to rotate.
5. Connect existing Pitot and Static lines to corresponding 1/8" NPT adapters on EFIS-D10A.

5.2.1 Replacement Hardware

The mounting hardware required to install an EFIS-D10A is listed below.

Table 1: Replacement Hardware

HARDWARE NUMBER	HARDWARE DESCRITION
AN365-632	Lock Nut
AN960-6	Washer

5.3 Electrical Installation

A separate D25 female wire harness (P/N 503838-000) can be purchased from Dynon that plugs into the D25 male connector on the rear of the EFIS-D10A. The wire harness has designated wires for connection to airplane power (see Table 2 for pin/wire connections).

Table 2: EFIS D10A, Pin/Wire Connection

D10A D25 PIN #	D10A D25 WIRE FUNCTION	D10A D25 WIRE COLOR	CONNECTION / NOTES
1	Power	Red	Power Input 3A Circuit Breaker/Fuse
3	Ground	Black	Airframe Ground
All Remaining	Do Not Connect	N/A	Do Not Connect

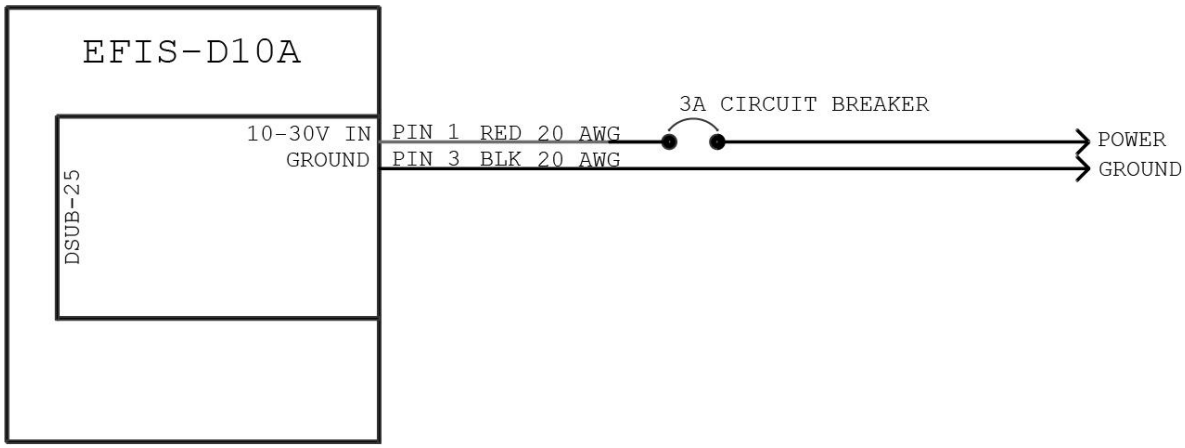

Figure 7: Electrical Connections

The EFIS-D10A is compatible with 14V and 28V electrical systems and requires a power supply of 10–30V DC. Power input to the EFIS-D10A must be protected with an aviation-grade 3A circuit breaker or replaceable fuse.

Always install electrical components in accordance with AC43.13-1b.

To connect the EFIS-D10A to an airplane's electrical system:

1. Make sure aircraft power is disconnected.
2. Connect dedicated 3A circuit breaker or replaceable fuse to appropriate electrical bus. See airplane manufacturer's documentation for guidance.
3. Route Power wire (pin 1) to power source and Ground wire (pin 3) to airframe ground.
4. Support and secure wires to avoid high heat and entanglement with moving components.
5. Use insulated connectors to connect Power wires to breaker/fuse.
6. Use insulated connectors to connect Ground wires to airframe ground.

5.4 Initial Operation Check

After completing the mechanical and electrical installations, installer must verify EFIS-D10A operation.

To verify operation of the EFIS-D10A:

1. Apply power to unit. Unit should start-up.
2. If unit does not start-up, press and hold Button #1 (first button on left). If unit still does not start-up, see Section 6: Troubleshooting for help.
3. Make sure display screen is bright and readable.
4. Make sure following indicators appear without a Red X covering them:
   - Airspeed,
   - Altitude (may take up to 30 seconds to appear),
   - Attitude.
5. If some indicators are not functional, see Section 6: Troubleshooting for help.
6. Press and hold button Button #1 until unit shuts-down.

5.5 Configuration

There are a few simple configuration tasks that must be completed before using the EFIS-D10A. This section guides you through those tasks.

5.5.1 Display Functions

Some display functions on the EFIS-D10A have not been approved for Certified installations by STC SA02594SE. Installers should disable non-Certified display functions prior to flight. Additionally, some approved display functions have configurable settings. See Table 3 for EFIS-D10A display functions and associated settings.

Table 3: Display Functions

MENU ITEM	FUNCTION	ACTION	CERTIFIED Y/N?
ALTBAR	Altimeter Bar	Toggles altitude tape display on/off.	**Yes**
ALTDIG	Altimeter Digital	Toggles digital altitude display on/off.	**Yes**
IASBAR	Indicated Airspeed Bar	Toggles airspeed tape display on/off.	**Yes**
IASDIG	Indicated Airspeed Digital	Toggles digital airspeed display on/off.	**Yes**
HDG	Heading	Toggles heading tape and digital heading displays on/off.	**No**
BALL	Slip/skid Ball	Toggles slip/skid ball and center marker displays on/off.	**Yes**
TURNRT	Turn Rate	Toggles turn rate indicator and scale marker displays on/off.	**Yes**
AOABAR	AOA Bar	Toggles angle of attack indicator display on/off.	**No**
CLOCK	Clock	Toggles clock display on/off.	**No**
BARO	Altimeter Setting	Toggles current altimeter setting display on/off.	**Yes**
ROLL	Roll Scale	Configures roll scale display: N – turns roll scale display off. 1 – turns roll scale display on and pointer is fixed (banked pointer). 2 – turns roll scale display on and pointer is movable (sky pointer).	**Yes**
GTRK	Ground Track	Configures ground track indicator on heading tape display: N – hides ground track indicator. Y – shows ground track indicator.	**No**
WIND	Winds Aloft	Configures wind arrow and speed indicator: N – hides wind arrow and speed indicator. Y – shows wind arrow and speed indicator.	**No**
ASTRND	Airspeed Trend	Toggles 6-second airspeed trend indicator next to airspeed tape display on/off.	**Yes**
VSI	Vertical Speed Indicator	Configures vertical speed indicator next to altitude tape display: N – turns vertical speed indicator off. 1k – turns vertical speed indicator on and sets 1,000 ft/min non-linear scaling. 2k – turns vertical speed indicator on and sets 2,000 ft/min linear scaling. 4k – turns vertical speed indicator on and sets 4,000 ft/min non-linear scaling.	**Yes**

MENU ITEM	FUNCTION	ACTION	CERTIFIED Y/N?
CDI	Course Deviation Indicator	Configures course deviation indicator above slip/skid ball display: N – hides course deviation indicator. Y – shows course deviation indicator. GS – shows both course deviation and glidescope indicators.	**No**
CRS	Course Pointer	Turns V-shaped course pointer indicator on heading tape display on/off.	**No**
TRIM	Elevator Trim	Turns elevator trim indicator display on/off.	**No**

To configure display functions:

1. Press any button (except far left and right buttons) on EFIS page, and then press MORE > SETUP > CLUTTR.
2. Find a Menu Item associate with a function. Press MORE to scroll through Menu Items.
3. Toggle function on/off or configure function as needed (see Table 3 for details).
4. When finished, press BACK to return to previous menu.

5.5.2 Airspeed Color Bar Thresholds

Airspeed color bar thresholds are configured in the IASCLR menu. In this menu, values are entered for the five airspeed constants (Vso, Vs1, Vfe, Vno, and Vne). Each airspeed constant has its own button. Values can be entered in units of knots, mph, or km/h. Displayed airspeed units are changed by pressing any button (except far left and right buttons) on EFIS page, and then pressing MORE > SETUP > UNITS > IAS. Always make sure the EFIS-D10A airspeed unit is the same as the SkyView HDX display airspeed unit.

To configure color bar thresholds for each airspeed constant:

1. Press any button (except far left and right buttons) on EFIS page, and then press MORE > SETUP > MORE > IASCLR.
2. Select an airspeed constant (VSO, VS1, VFE, VNO, VNE).
3. Press SEL to select a digit in the airspeed constant value.
4. Press DEC- or INC+ to decrement or increment selected digit.
5. When finished, press BACK to return to previous menu.

Some colors may not be displayed until the airplane has achieved airspeeds in the range of each threshold.

5.5.3 Zero Pitch Calibration

Zero Pitch calibration should be considered a configuration step that does not need to be performed routinely. This calibration is not the same as a parallax adjustment on a mechanical attitude indicator. Additionally, this calibration should not be used to "zero-out" pitch when the airplane is at an attitude other than level.

This calibration should be performed when the airplane is leveled in accordance with the airplane manufacturer's maintenance leveling instructions.

To calibrate zero pitch:

1. With the airplane leveled, enter menu system by pressing any button (except far left and right buttons) on EFIS page, and then press MORE > SETUP > PITCH.
2. Press INC - or DEC + until the horizon line intersects the center of the crosshairs.
3. When finished, press BACK > EXIT.

This calibration must be performed while the airplane is level to ensure proper pitch and roll display throughout all maneuvers.

This page intentionally left blank.

6 Troubleshooting

The EFIS-D10A includes limited self-diagnostic capability. If a fault with the EFIS-D10A is detected, a message will be displayed on the screen. The following table provides a recommendation for each specific warning.

Table 4: EFIS-D10A Self-Diagnostic Messages

MESSAGE	POSSIBLE CAUSES	RESULT/ACTION
INTERNAL ERROR SERVICE UNIT	This error signifies that the EFIS-D10A has detected internal problems in its firmware or calibration tables.	Contact Dynon Avionics Technical Support. It may be possible to recover unit in the field. However, it is likely that the unit will have to be returned for service.
TEMPERATURE UNSTABLE	When the unit is turned on after having been off for a long period of time, its internal temperature will rise above ambient temperature at a rapid rate. This rapid change in temperature can sometimes reduce the reliability of the sensors' outputs. Therefore, this alert is displayed, and the horizon indication is changed from blue/brown to grey/black.	The screen remains normal color, but the message is displayed until the temperature within the unit has stabilized. This temperature instability should last no longer than 2 minutes. For this reason, it is a good idea to turn the unit on before you run through any of the preflight procedures, so that it will be ready by the time you are ready to fly.
TEMPERATURE OUT OF SPEC	The temperature inside the unit is outside of -22ºF to 122ºF (-30ºC to 50ºC).	The screen remains normal color, but the message is displayed until the temperature within the unit is within the specified range. This is most common in unventilated panels during hot periods. If you continue to see this alert, provide more airflow to the space around the EFIS-D10A.
INTERNAL BATTERY LOW	You will see this alert only when operating the unit solely off the internal backup battery. When its voltage has dropped below a certain threshold, you will see this alert. Additionally, the voltmeter will be displayed onscreen.	The alert will disappear when you press any button on the EFIS-D10A; however, it is advised that you do not ignore this alert, as it appears when the unit's internal battery has very little life left. This alert will also go away upon the application of external power. At that point, the battery will begin charging off the external power.

This page intentionally left blank.

7 Maintenance

This section provides information about maintaining and servicing the EFIS-D10A.

7.1 Periodic Maintenance

See Table 5 for maintenance tasks that must be performed routinely.

Table 5: Periodic Maintenance

ITEM	DESCRIPTION / PROCEDURE	INTERVAL
Component Troubleshooting, Removal, and Re-installation	See Section 6: Troubleshooting and Section 7.4: Unit Removal and Replacement.	On condition
Cleaning the Display	The front bezel and display can be cleaned with a soft cotton cloth dampened with clean water. DO NOT use any chemical-based cleaning agents. Take care to not scratch surface of display.	On condition
Display Backlight	The backlight lamp may dim over time, and the display may not perform as well in direct sunlight conditions. User must determine by observation when the display brightness is not suitable for intended use. Contact Dynon technical support.	On condition or every 24 calendar months.
Backup Battery	The battery must be tested every 12 calendar months; a warning will display if not done within that time period. See Section 7.2 for backup battery test. Regular planned replacement is not necessary.	On Condition, or every 12 calendar months.
Altimeter	Test in accordance with 14 CFR, Part 43, Appendix E and document in accordance with §43.9.	For IFR Operations, every 24 calendar months in accordance with §91.411

ITEM	DESCRIPTION / PROCEDURE	INTERVAL
Visual Inspection	The EFIS-D10A, wiring harness, and pneumatic connections should be inspected to ensure continued integrity of the installation (see below). • Inspect for security of unit attachment. • Inspect for signs of corrosion. • Inspect all buttons for proper operation. • Inspect condition of wiring, shield terminations, routing and attachment/clamping, along with any airplane penetration points. • Inspect condition of pneumatic tubing, connectors/splices, routing and attachment, along with any airplane penetration points. **IMPORTANT:** If visual inspection requires the unit to be disconnected from the electrical and/or pitot and static systems, the unit must be serviced by an appropriately rated person or facility.	Every 12 calendar months.

7.2 Backup Battery Test

The EFIS-D10A backup battery must be tested once every 12 months to ensure it is operational and meets the nominal 45-minute expected backup operation period. The backup battery must be fully charged prior to beginning the test.

To ensure the EFIS-D10A backup battery is fully charged:

1. Allow unit to draw power from airplane. Backup battery must be charged to at least 16.0 volts.
2. Enter menu system by pressing any button (except far left and right buttons) on an EFIS page, and then press EFIS > MORE > INFO > LEFT > VMETER.
3. Make sure backup battery is charged to at least 16.0 volts. Backup battery may charge up to 16.8 volts, but it is only necessary to charge it to 16.0 volts for the test.

To test the EFIS-D10A backup battery:

1. Remove all sources of external power from unit. When power is lost, a red bar will appear with a 30-second countdown timer.
2. Press STAY ON to allow unit to continue operating off its backup battery.
3. Enter menu system by pressing any button (except far left and right buttons) on EFIS page, and then press MORE > DIM > BRTTR and fully increase brightness level.
4. Let the unit remain on.
5. After 45 minutes, if unit has not turned off and does not display the INTERNAL BATTERY LOW warning, the backup battery passes test.

6. If backup battery did not pass test, then it must be replaced (see Section 7.3: Backup Battery Replacement for instructions).
7. If backup battery passed test, restore power to unit and charge backup battery until voltage is above 15.0 volts before returning to service.

7.3 Backup Battery Replacement

This section provides replacement procedures for the EFIS-D10A backup battery.

If backup battery replacement requires the unit to be disconnected from the electrical and/or pitot and static systems, it must be performed by an appropriately rated person or facility.

Replacement EFIS-D10A backup batteries are available from Dynon Avionics or authorized dealers and can be replaced in the field.

Location:

The backup battery is internal to the EFIS-D10A.

To replace the EFIS-D10A backup battery:

1. If needed, remove unit from instrument panel (see Section 7.4: Unit Removal and Replacement for instructions).
2. Open backup battery door by removing hex screws (see Figure 8). Do not remove other screws.
3. Unplug electrical connection between backup battery and unit and gently pull backup battery out of unit.
4. Insert new backup battery so side of battery where wires attach point upward, towards internal protective foam.
5. Plug backup battery electrical connector into matching unit electrical connector.
6. Verify new backup battery is operational by pressing Button #1 on EFIS-D10A page. Unit should boot up and present the display. Press and hold Button #1 until unit powers off.
7. Position electrical connection so it is centered on end of backup battery. Make sure electrical connection will not interfere with bottom hex screw (see Figure 8).
8. Position backup battery door over opening on unit.
9. Insert bottom hex screw (see Figure 8) and tighten. DO NOT over-tighten.
10. Insert upper hex screws (see Figure 8) and tighten while gently pressing on door. DO NOT over-tighten. The upper hex screws thread into unit casing, where it is easy to over-tighten and strip hole threads.

7.4 Unit Removal and Replacement

This section provides removal and installation procedures for the EFIS-D10A. The following procedures must be performed by an appropriately rated person or facility.

Location:

The EFIS-D10A is typically located on the left side of the instrument panel.

To remove the EFIS-D10A:

1. Turn off aircraft power.
2. Remove lock nuts and washers from mounting studs that secure unit to instrument panel (see Figure 8). Keep hardware for re-installation.
3. Carefully slide unit out.
4. Disconnect and cap 1/8" NPT Pitot and Static fittings on unit (see Figure 8). AoA fitting should already be capped.
5. Cap Pitot and Static tubes.
6. Remove (2) retention screws on D25 connector and disconnect wire harness from unit (see Figure 8).

To install the EFIS-D10A:

1. Connect wire harness to D25 connector on unit (see Figure 8) and secure with (2) retention screws.
2. Attach Pitot and Static tubes to 1/8" NPT fittings on unit (see Figure 8).
3. Line-up mounting studs to holes and insert unit into instrument panel.
4. Secure unit to instrument panel with original lock nuts and washers (see Figure 8).

   If original mounting hardware is lost, use AN365-632 (lock nut) and AN960-6 (washer) for replacement.

5. Restore power to main bus.
6. Check system for leaks (see airplane manufacturer's maintenance manual for instructions).
7. Ensure airspeed, altitude, and attitude indicators are working (see Section 5.4 Initial Operation Check for instructions).

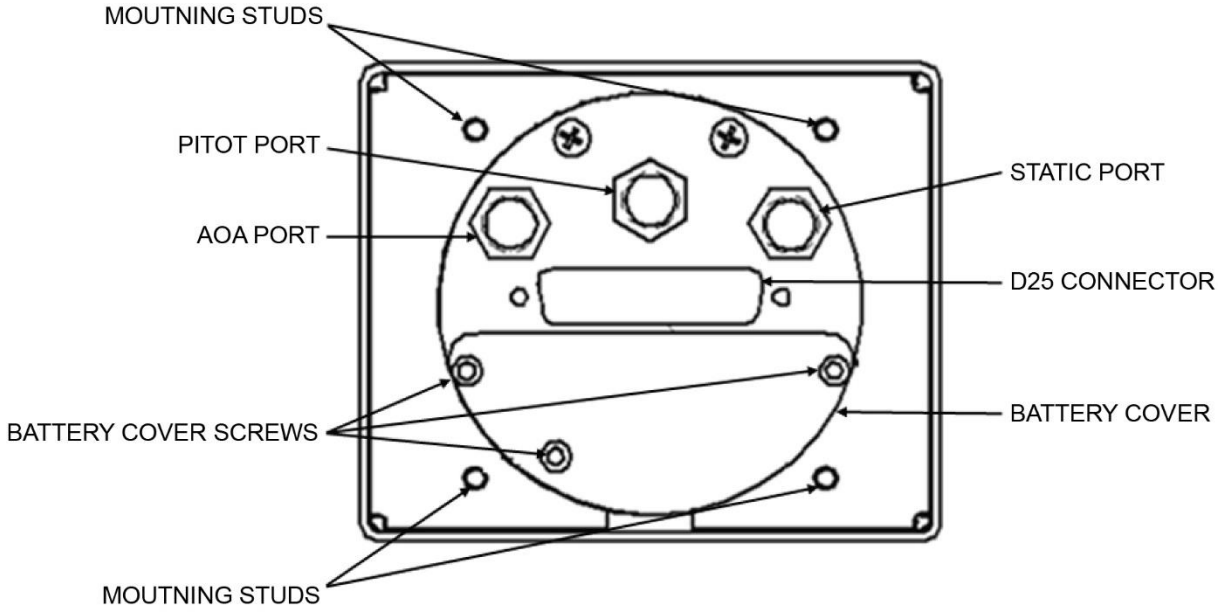

Figure 8: EFIS-D10A, Rear View

7.5 Altimeter Function Test

Prior to calibration, the EFIS-D10A's altimeter function must be tested in accordance with 14 CFR, Part 43, Appendix E by an appropriately rated person or facility.

When performing the Altimeter Function Test, turn OFF the EFIS-D10A before changing the test equipment's static pressure/altitude setting. Not doing so can corrupt the EFIS-D10A's internal calibrations.

To test the EFIS-D10A's altimeter:

1. Turn EFIS-D10A ON and allow unit to warm up until altitude reading is stabilized (i.e., 5 minutes).
2. Turn EFIS-D10A OFF.
3. Set test equipment's static pressure/altitude.
4. Turn EFIS-D10A ON and note indicated altitude.
5. Repeat Steps 2-4 as required to complete testing in accordance with 14 CFR, Part 43, Appendix E.

7.6 Altimeter Adjustment

If the altimeter function is determined to be out of specification, an appropriately rated person or facility can adjust it up to 500 feet up or down in the Altimeter Adjustment menu.

To adjust the EFIS-D10A's altimeter after testing:

1. Enter menu system by pressing any button (except far left and right buttons) on EFIS page, and then press MORE > SETUP > MORE > ALTADJ.
2. Press INC - or DEC + until altimeter meets allowed tolerances between 0 and 30,000 feet.
3. When finished, press BACK > EXIT.

If adjustment does not bring the altimeter to within specification, contact Dynon Avionics to return unit for service.

7.7 Firmware Updates

Version 5.6.1 is the latest and final firmware version for the EFIS-D10A. If the unit is running an older version, contact Dynon Avionics Technical Support for help upgrading.

To check EFIS-D10A firmware version:

- Press any button (except far left and right buttons) on EFIS page, and then press MORE > SETUP > MORE > VRSION.