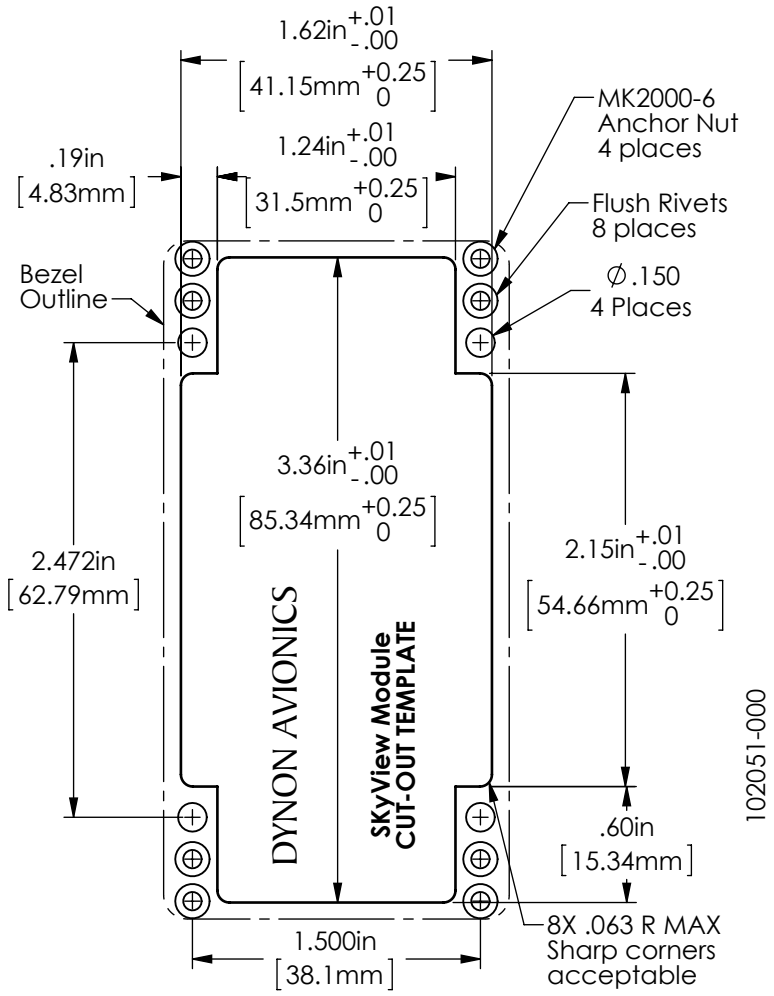
1.62in +.01 -.00
[41.15mm +0.25 0]
1.24in +.01 -.00
[31.5mm +0.25 0]
.19in
[4.83mm]
MK2000-6
Anchor Nut
4 places
Flush Rivets
8 places
∅.150
4 Places
Bezel
Outline
3.36in +.01 -.00
[85.34mm +0.25 0]
2.472in
[62.79mm]
2.15in +.01 -.00
[54.66mm +0.25 0]
DYNON AVIONICS
SkyView Module
CUT-OUT TEMPLATE
.60in
[15.34mm]
1.500in
[38.1mm]
8X .063 R MAX
Sharp corners
acceptable
102051-000

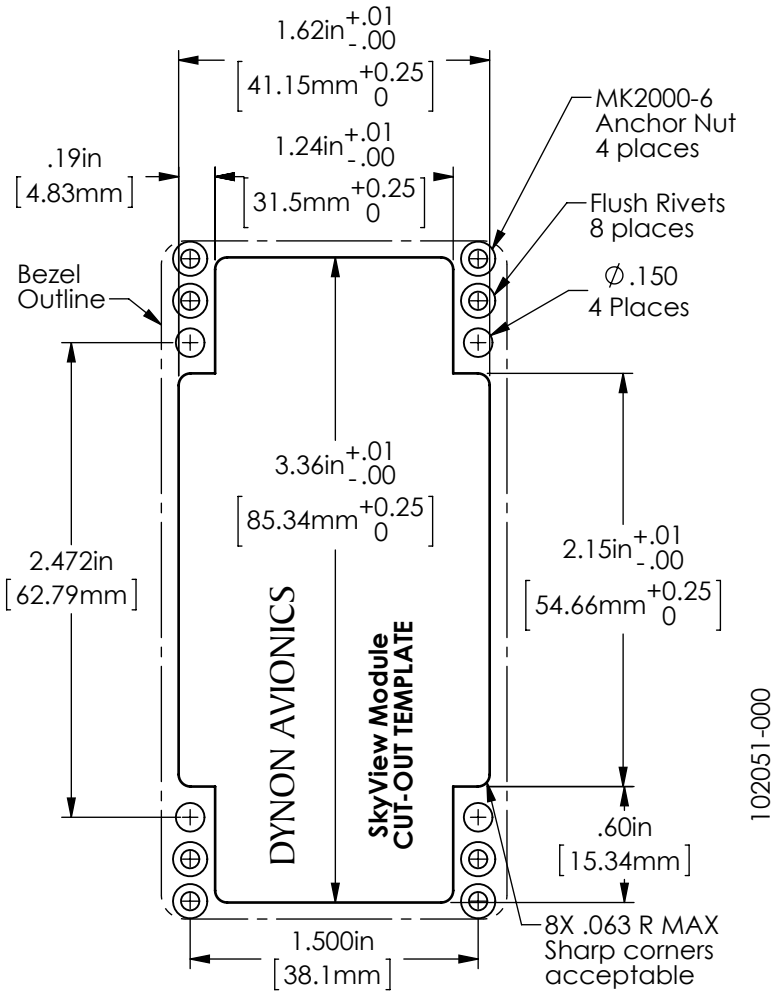
1.62in +.01 -.00
[41.15mm +0.25 0]
1.24in +.01 -.00
[31.5mm +0.25 0]
.19in
[4.83mm]
MK2000-6
Anchor Nut
4 places
Flush Rivets
8 places
∅.150
4 Places
Bezel
Outline
3.36in +.01 -.00
[85.34mm +0.25 0]
2.472in
[62.79mm]
2.15in +.01 -.00
[54.66mm +0.25 0]
DYNON AVIONICS
SkyView Module
CUT-OUT TEMPLATE
.60in
[15.34mm]
1.500in
[38.1mm]
8X .063 R MAX
Sharp corners
acceptable
102051-000

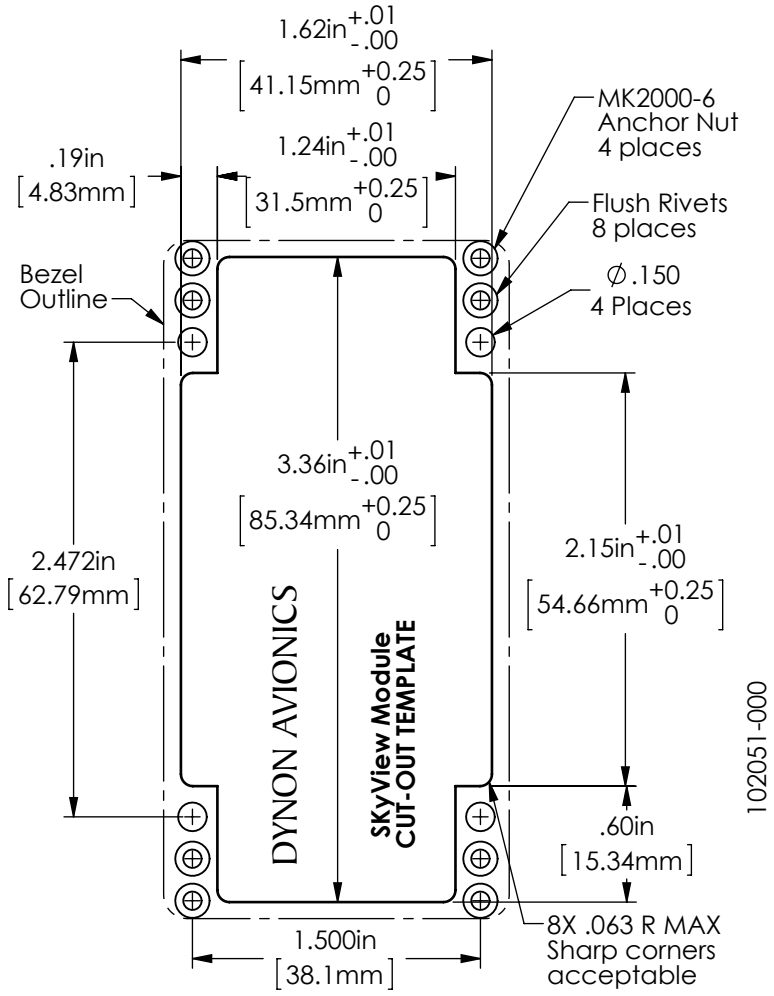
1.62in +.01 -.00
[41.15mm +0.25 0]
1.24in +.01 -.00
[31.5mm +0.25 0]
.19in
[4.83mm]
MK2000-6
Anchor Nut
4 places
Flush Rivets
8 places
∅.150
4 Places
Bezel
Outline
3.36in +.01 -.00
[85.34mm +0.25 0]
2.472in
[62.79mm]
2.15in +.01 -.00
[54.66mm +0.25 0]
DYNON AVIONICS
SkyView Module
CUT-OUT TEMPLATE
.60in
[15.34mm]
1.500in
[38.1mm]
8X .063 R MAX
Sharp corners
acceptable
102051-000

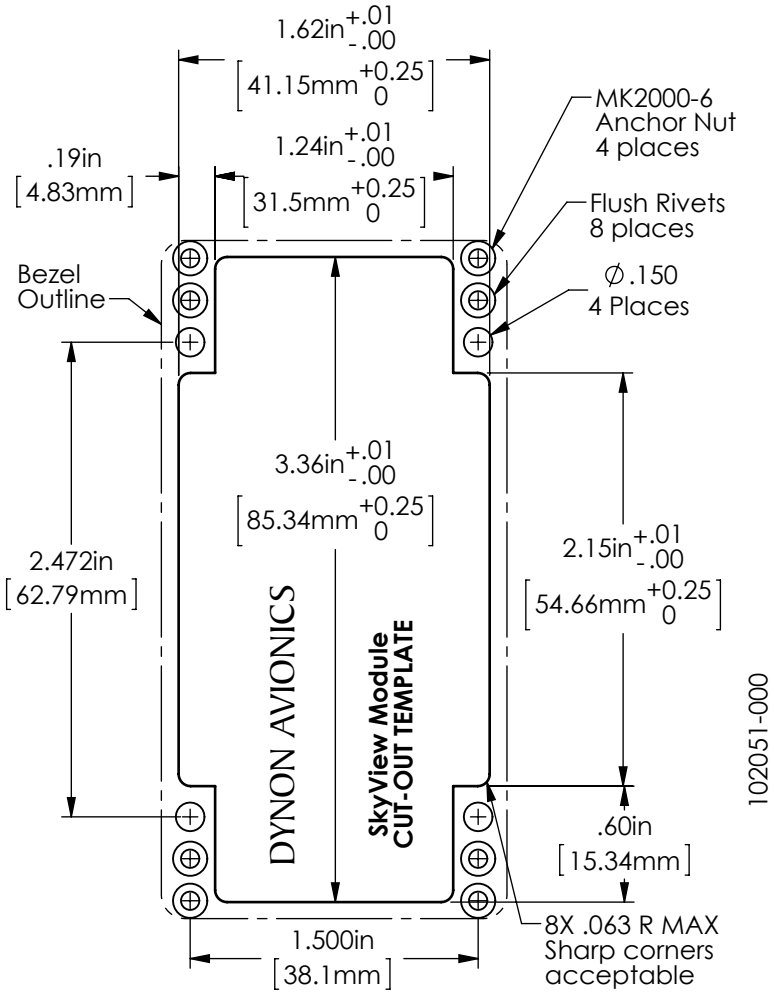
1.62in +.01 -.00
[41.15mm +0.25 0]
1.24in +.01 -.00
[31.5mm +0.25 0]
.19in
[4.83mm]
MK2000-6
Anchor Nut
4 places
Flush Rivets
8 places
∅.150
4 Places
Bezel
Outline
3.36in +.01 -.00
[85.34mm +0.25 0]
2.472in
[62.79mm]
2.15in +.01 -.00
[54.66mm +0.25 0]
DYNON AVIONICS
SkyView Module
CUT-OUT TEMPLATE
.60in
[15.34mm]
1.500in
[38.1mm]
8X .063 R MAX
Sharp corners
acceptable
102051-000